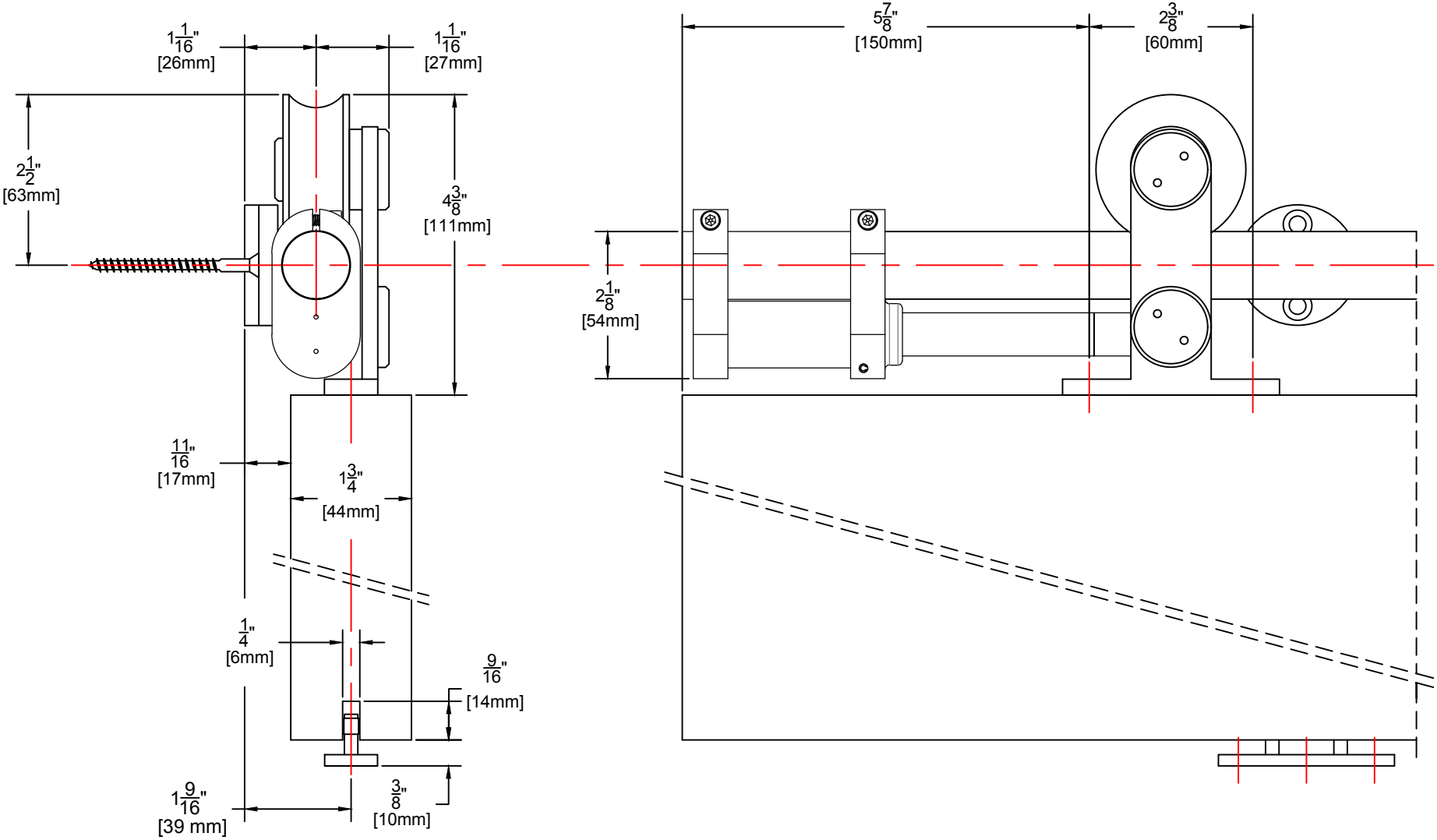
1 1/16"
[26mm]
1 1/16"
[27mm]
2 1/2"
[63mm]
4 3/8"
[111mm]
11/16"
[17mm]
1 3/4"
[44mm]
1/4"
[6mm]
9/16"
[14mm]
1 9/16"
[39 mm]
3/8"
[10mm]
5 7/8"
[150mm]
2 3/8"
[60mm]
2 1/8"
[54mm]