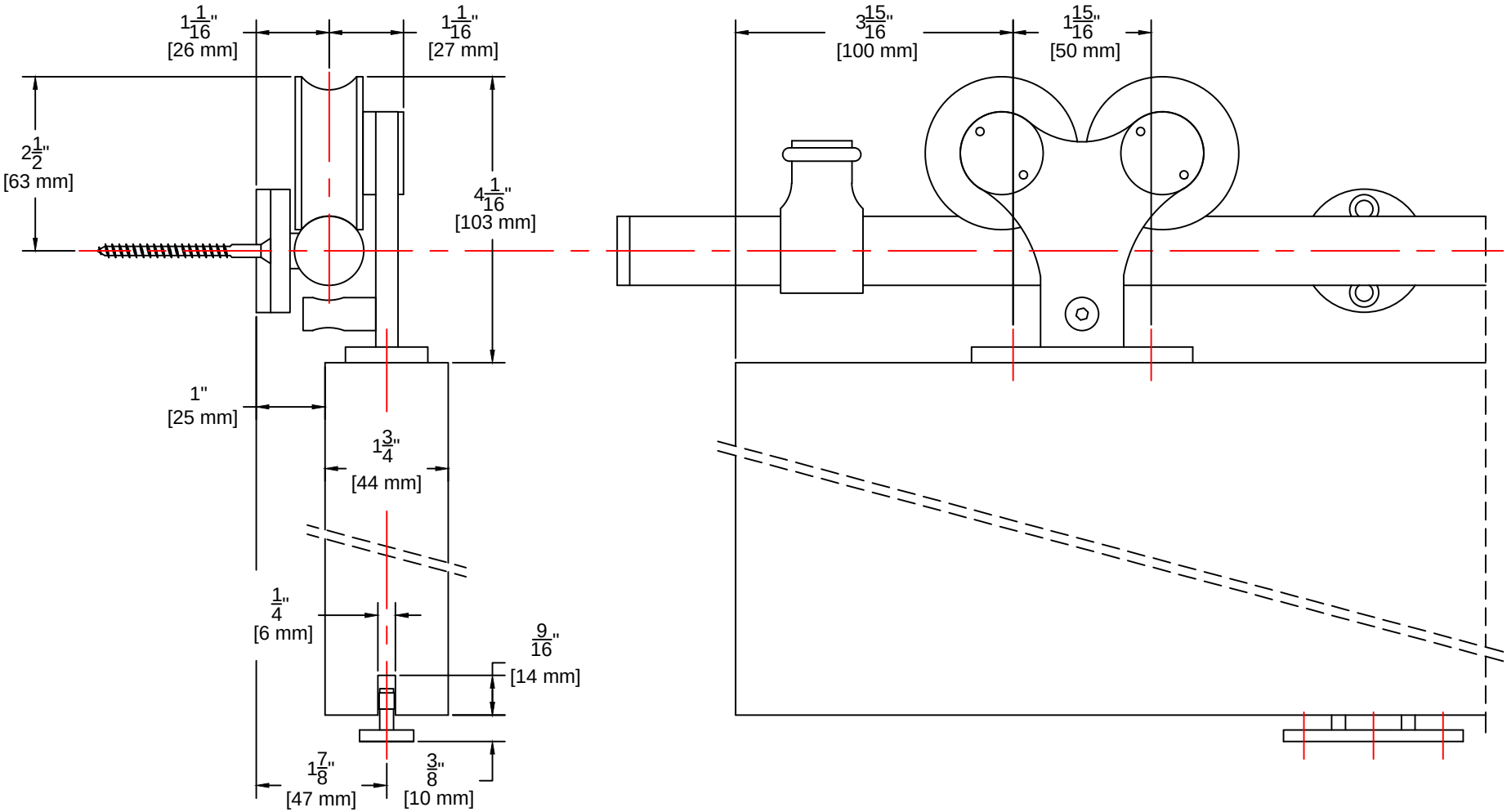
1 1/16"
[26 mm]
1 1/16"
[27 mm]
2 1/2"
[63 mm]
4 1/16"
[103 mm]
1"
[25 mm]
1 3/4"
[44 mm]
1/4"
[6 mm]
9/16"
[14 mm]
1 7/8"
[47 mm]
3/8"
[10 mm]
3 15/16"
[100 mm]
1 15/16"
[50 mm]