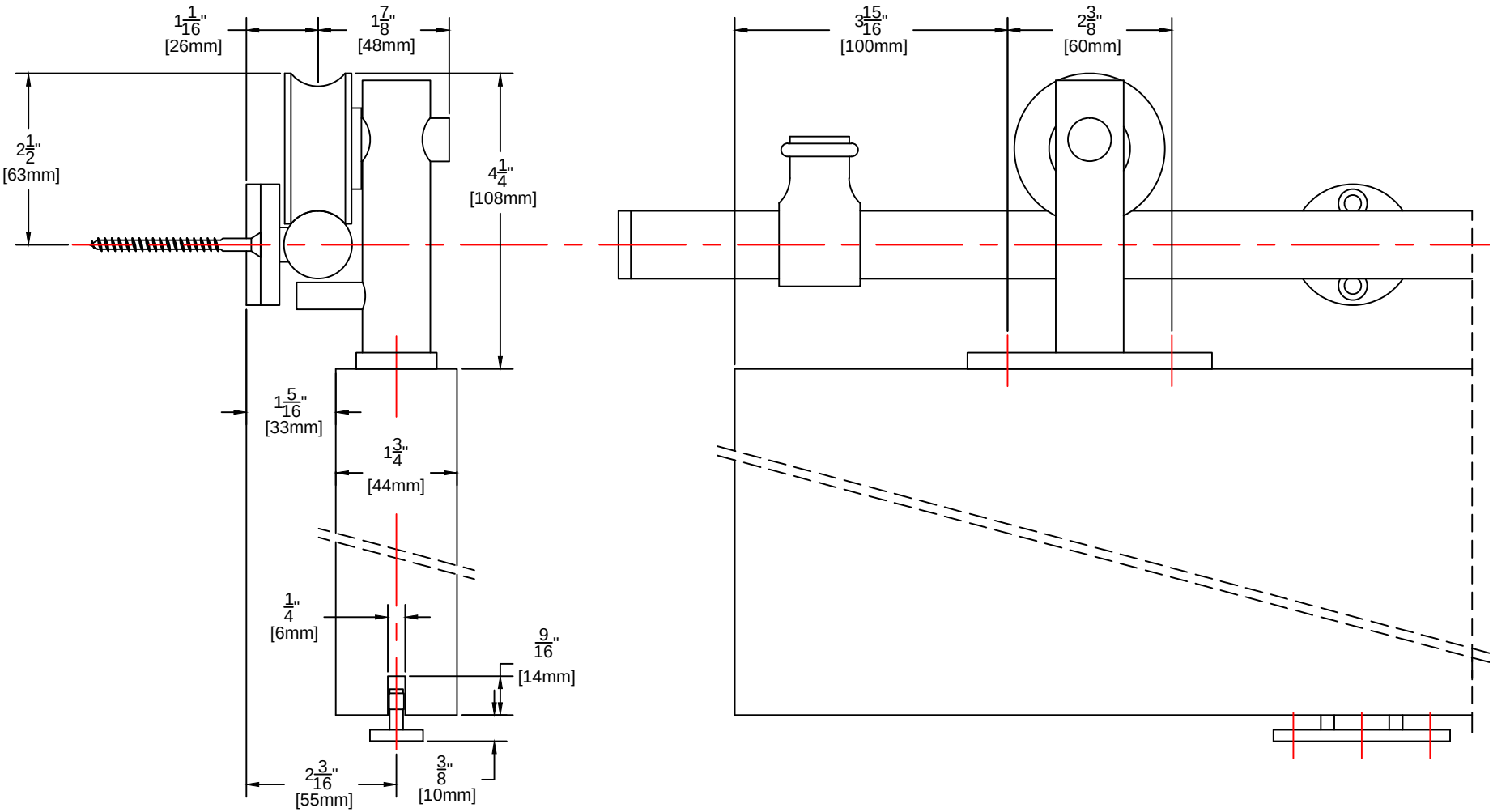
1 1/16"
[26mm]
1 7/8"
[48mm]
2 1/2"
[63mm]
4 1/4"
[108mm]
1 5/16"
[33mm]
1 3/4"
[44mm]
1/4"
[6mm]
9/16"
[14mm]
2 3/16"
[55mm]
3/8"
[10mm]
3 15/16"
[100mm]
2 3/8"
[60mm]