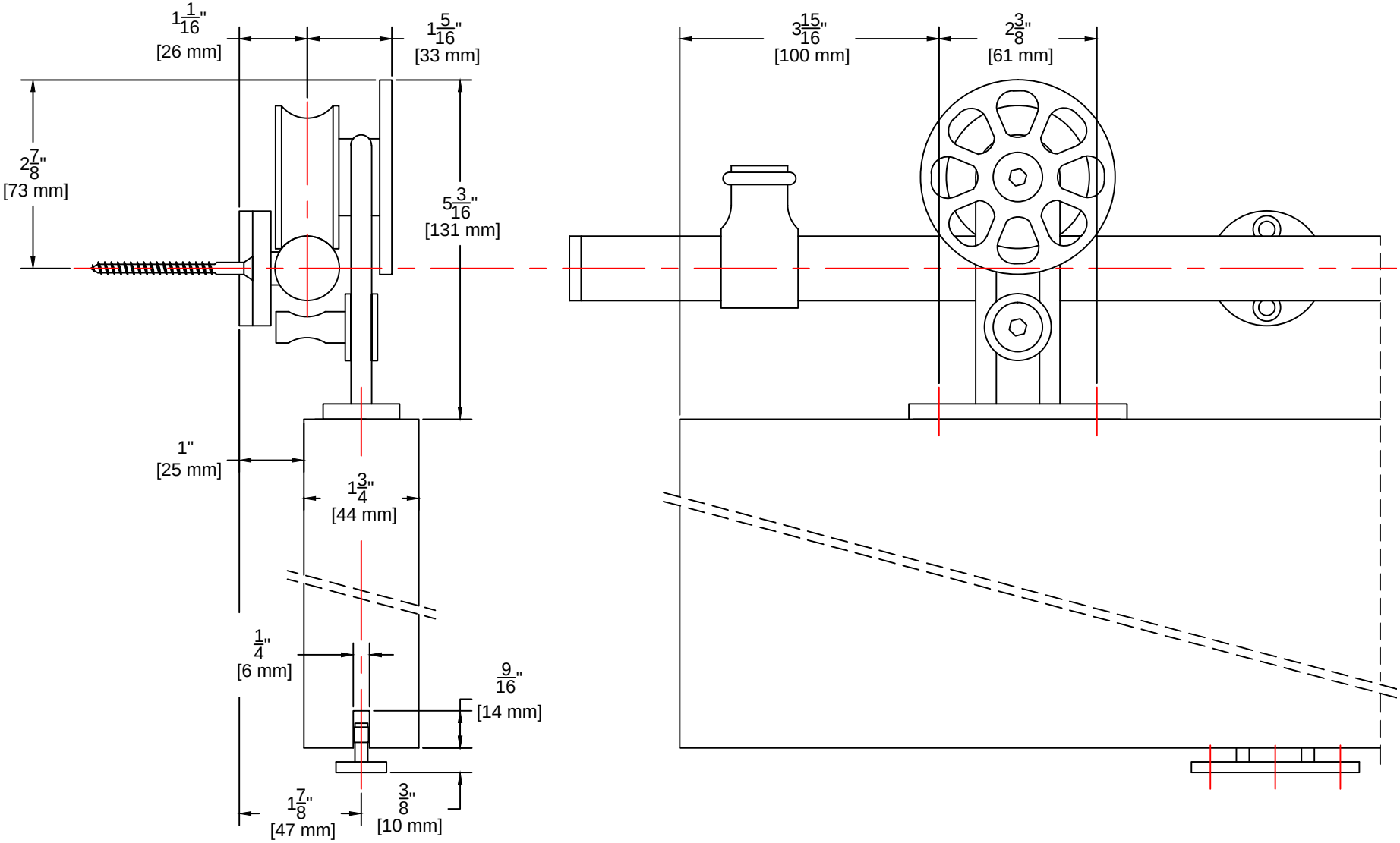
1 1/16"
[26 mm]
1 5/16"
[33 mm]
2 7/8"
[73 mm]
5 3/16"
[131 mm]
1"
[25 mm]
1 3/4"
[44 mm]
1/4"
[6 mm]
9/16"
[14 mm]
1 7/8"
[47 mm]
3/8"
[10 mm]
3 15/16"
[100 mm]
2 3/8"
[61 mm]